Application Note
MAP sensor MPX5700

Firmware/Software Version:	Any
Vehicle:	Universal
Additional Notes:	

Wiring and pin input

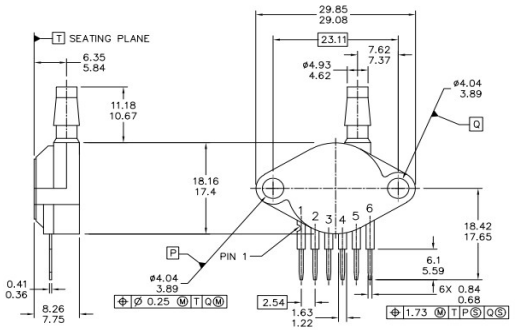

MAP sensor Configuration Details	
Common settings:	-31.1kpa=0V and 760kpa = 5V.

Voltage	Pressure Kpa
0.2	15
4,7	700

------ **Disclaimer:** The information in this document is believed to be correct. It is up to the end user to verify the correct setup for his/her application. ------