Application Note
MAP sensor MPX4250

Firmware/Software Version:	Any
Vehicle:	Universal
Additional Notes:	Connector delivered with the KdFi
External MAP wiring:	**RED** **5V** **BLACK** **GND** **PURPLE** **OUTPUT** LED will light-up when powered

Wiring and pin input

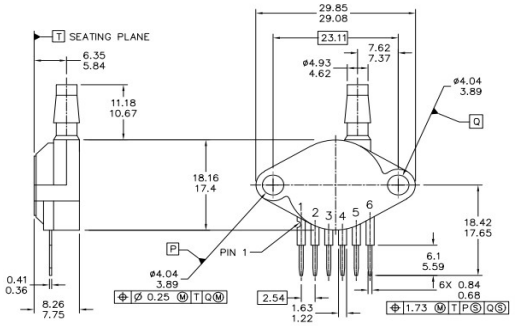

MAP sensor Configuration Details	
Common settings:	10kpa=0V and 260kpa = 5V.
	Pre-set within Tunerstudio

Voltage	Pressure Kpa
0.2	15
4,7	245

------ Disclaimer: The information in this document is believed to be correct. It is up to the end user to verify the correct setup for his/her application. ------